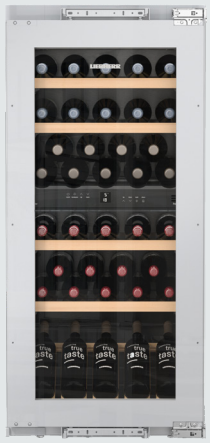

*Steel door to be ordered separately

German Engineering

LIEBHERR

EWTdf 2353
Integrated Wine Cooler

Vinidor, Multi-Temperature Wine Fridge

2 Zones | Humidity Select | Fresh Air | UV Protect | Vibrate Safe | Steel Interior | LED | Soft System | Telescopic Rails | Presentation Board

CONTROLS

Type of Control:
- LCD display, touch electronic
- Digital temperature display for both wine zones

Alarm in case of malfunction: Visual and acoustic
Door alarm: Acoustic
Child proof function

DIMENSIONS

Aperture dimensions	Product dimensions
W: 56-57 cm	W: 55.7cm
H: 122-123.6 cm	H: 121.8cm
D: min. 55 cm	D: 55.3 cm

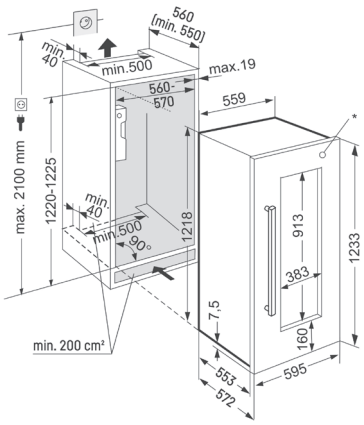

FINISH

Stainless steel
SKU: IT21309

POWER AND CONSUMPTION

Max. number of Bordeaux bottles 0.75 Ltr: 48
Total volume: 159 l
Noise output: 32 dB(A)
Climate rating: SN-ST (+10 °C to +38 °C)
Frequency: 50/60 Hz
Voltage: 220-240 V
Connection Rating: 1.5 A
Energy consump. in 365 days/24 h: 151 kWh
Energy efficiency class: G

FEATURES

Temperature zones: 2
Temperature range: +5 °C to +20 °C
Adjustable cooling circuits: 2
Forced air system: Convection cooling, fresh air supply via FreshAir activated charcoal filter
Interior light: LED lighting permanently on, dimmable

DESIGN AND MATERIALS

Type: Fixed door / Built-in appliance with decor panel
Door: Insulated glass door prepared for cabinet door or stainless steel front
Shelf material: Beech wood fittings
Storage shelves: 6
Pull-out shelves on telescopic rails: 4
Door hinges: Reversible door hinging, right

Despite careful data management, our brands reserve the right to make changes, and discrepancies may occur.

MVP APPLIANCES

Head Office / Showroom Dubai
PO Box 37959, Dubai
+971 4 380 9490

Showroom Abu Dhabi
PO Box 28239, Abu Dhabi
+971 2 444 6160

Service Center
UAE 600 555 602

MVPAPPLIANCES.COM