LIEBHERR

UBCpr 376i
Under Counter Beverage Fridge

Prime

Beverage | Super Cool | Soft System | Touch & Swipe Display | Smart Device

VOLUME
Total volume: 130 L

DIMENSIONS
Aperture dimensions
W: 600 mm
H: 860-920 mm
D: 565 mm min.

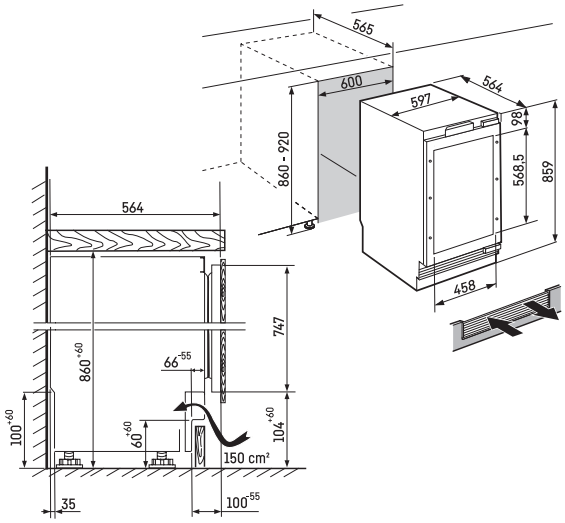

FRIDGE COMPARTMENT
Forced air system: PowerCooling
with FreshAir activated charcoal filter
Interior light: LED ceiling lighting

POWER AND CONSUMPTION
Noise output: 34 dB(A)
Energy consumption in 365 days / 24 h: 161 / 0.441 kWh
Energy efficiency class: B

CONTROLS
2.4" TFT-colour display/touch & swipe
Digital temperature display
Interface: SmartDeviceBox included
Door alarm: Visual and acoustic
Alarm in case of malfunction: Visual and acoustic

DESIGN AND MATERIALS
Type: Fixed door / Under-worktop appliance
Door hinges: Reversible door hinging, right
Replaceable door seal

FINISH
Black
SKU: IT0022936

Despite careful data management, our brands reserve the right to make changes, and discrepancies may occur.

MVP APPLIANCES

Head Office / Showroom Dubai
PO Box 37959, Dubai
+971 4 380 9490

Showroom Abu Dhabi
PO Box 28239, Abu Dhabi
+971 2 444 6160

Service Center
UAE 600 555 602

MVPAPPLIANCES.COM