elica

ILLUSION
Ceiling Cooker Hood

Duct-Out

FEATURES
Energy class A
Design Fabrizio Crisà
Long Life Filter
Total integration
Comfort silence
Delay Switch Off
Dim Light
Tune White
Airmatic
Brushless
Long Life Filter ++
Maintenance Alarm
Connectivity
Super Easy Installation
Aluminium grease filter included
Remote control included

DIMENSIONS
1000 mm x 500 mm

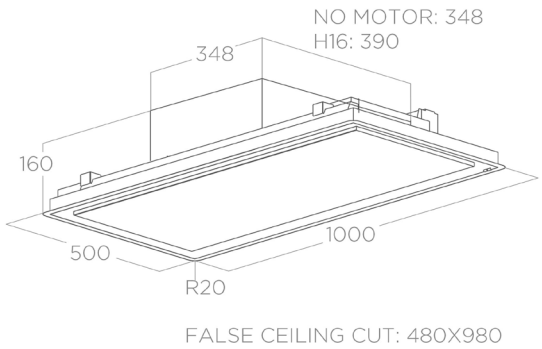

FINISH
Black
SKU: IT0022677

LIGHTING
Type: Strip LED 2x14 W
Intensity: 563 LUX
Temperature: 2700 - 5000 K

PERFORMANCE
Control: 3S + 2B Remote control
Booster airflow: 720 m3/h
Noise level min-max: 51-68 db(A)
Total absorption: 303 W

MIN. DISTANCE FROM HOB
- Gas - 700 mm
- Induction/Radiant - 650 mm

MVP APPLIANCES

Head Office / Showroom Dubai
PO Box 37959, Dubai
+971 4 380 9490

Showroom Abu Dhabi
PO Box 28239, Abu Dhabi
+971 2 444 6160

Service Center
UAE 600 555 602

MVPAPPLIANCES.COM