ELBA

IGO12BUC
Built-in Under Combi

LED Light, Inverter

VOLUME

Gross capacity total 112 l
Net capacity total 111 l
Net capacity refrigerator 95 l
Net capacity freezer 16 l
Rated freezing capacity
2.6 kg/24

DIMENSIONS

W: 596 mm
H: 820 mm
D: 550 mm

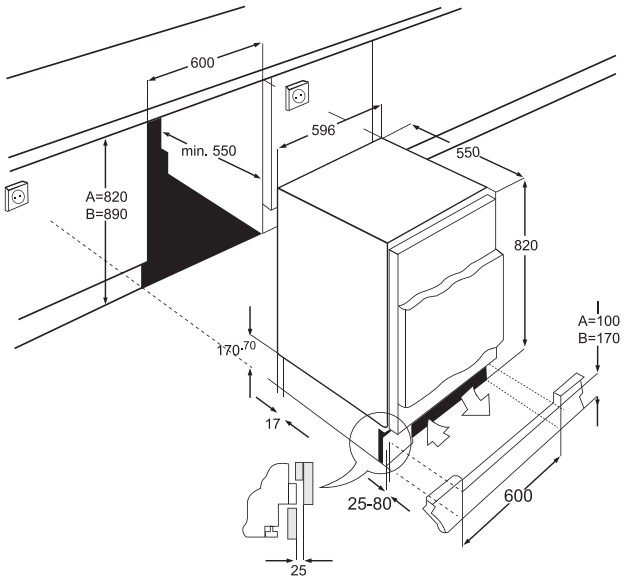

FEATURES

Cooling system: Manual defrosting
Compressor: Inverter motor
Built under combi
Energy efficiency index: 124 (EEI)
Amount of refrigerant: 30g
Other refrigerating appliance: Yes
Standard annual energy consumption: 147.69
Daily energy consumption at 16°C (E16): 0.221
Daily energy consumption at 32°C (E32): 0.783
Temperature rise time: 11 h
Combi parameter: 1.43
Door heat loss factor (D): 1
Load factor (L): 1
Climate class: ST
Airborne acoustical noise emissions: 40 dB(A)
Airborne acoustical noise emission class: C
Minimum ambient temperature: 16
Maximum ambient temperature: 38
LED light

POWER AND CONSUMPTION

Total electrical power load: 100 W
Energy efficiency class: A+
Refrigerant: R600a

FINISH

White
SKU: IT21067

Despite careful data management, our brands reserve the right to make changes, and discrepancies may occur.

MVP APPLIANCES

Head Office / Showroom Dubai
PO Box 37959, Dubai
+971 4 380 9490

Showroom Abu Dhabi
PO Box 28239, Abu Dhabi
+971 2 444 6160

Service Center
UAE 600 555 602

MVPAPPLIANCES.COM