ELBA

EL905BK
Wall Mounted Cooker Hood

Duct-out/Recycling

DIMENSIONS
W: 900 mm
D: 500 mm

FEATURES
3 Speeds push button control
2 meters plastic exhaust pipe
Energy class: B
Total electric absorption: 264 W

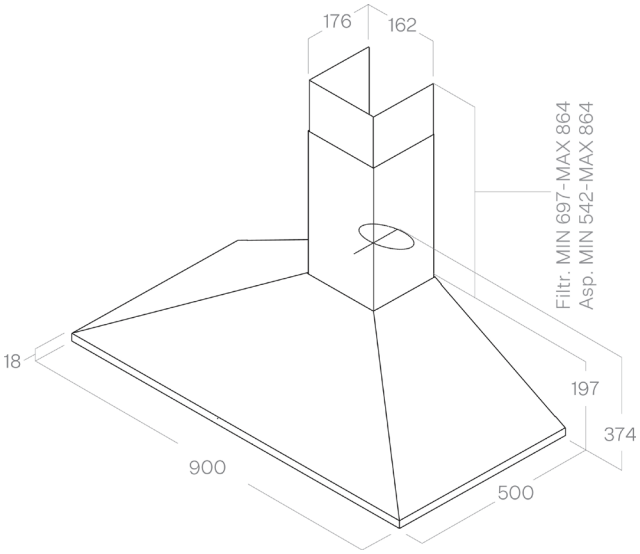

PERFORMANCE
Airflow: 1000 m^3/h
Motor power: 264 W
2 Halogen lights
Light Power: Max. 2x2 W

FILTERS
Aluminium anti-grease filter: 3
Charcoal filter

FINISH

Black
SKU: IT0022709

MVP APPLIANCES

Head Office / Showroom Dubai
PO Box 37959, Dubai
+971 4 380 9490

Showroom Abu Dhabi
PO Box 28239, Abu Dhabi
+971 2 444 6160

Service Center
UAE 600 555 602

MVPAPPLIANCES.COM