ALGOR

AUM750-45SS
Sink

Top-Mount, Undermount

DIMENSIONS
750 x 450 x 220 mm

CUTOUT
700 x 400 x 210 mm

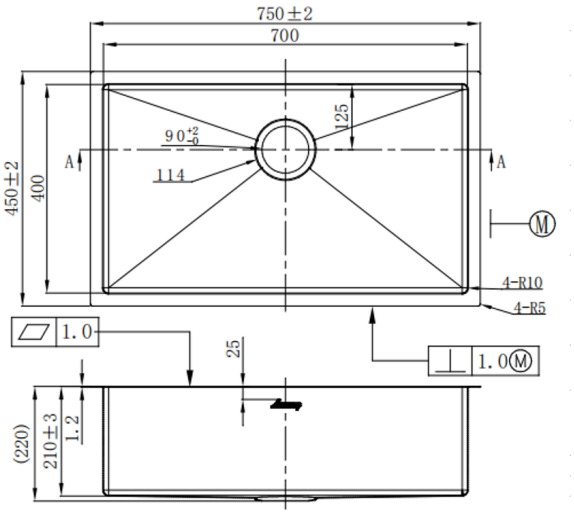

DESIGN AND MATERIALS
Material: SUS304 Stainless steel

FEATURES
Big single bowl
PVD surface, better hydrophobicity
Thickness: 1.2 mm
Net weight: 8 kg
Gross weight:10 kg
Flow rate: 0.64 L/S

FINISH
Stainless steel
SKU: IT0022260

Despite careful data management, our brands reserve the right to make changes, and discrepancies may occur.

MVP APPLIANCES

Head Office / Showroom Dubai
PO Box 37959, Dubai
+971 4 380 9490

Showroom Abu Dhabi
PO Box 28239, Abu Dhabi
+971 2 444 6160

Service Center
UAE 600 555 602

MVPAPPLIANCES.COM